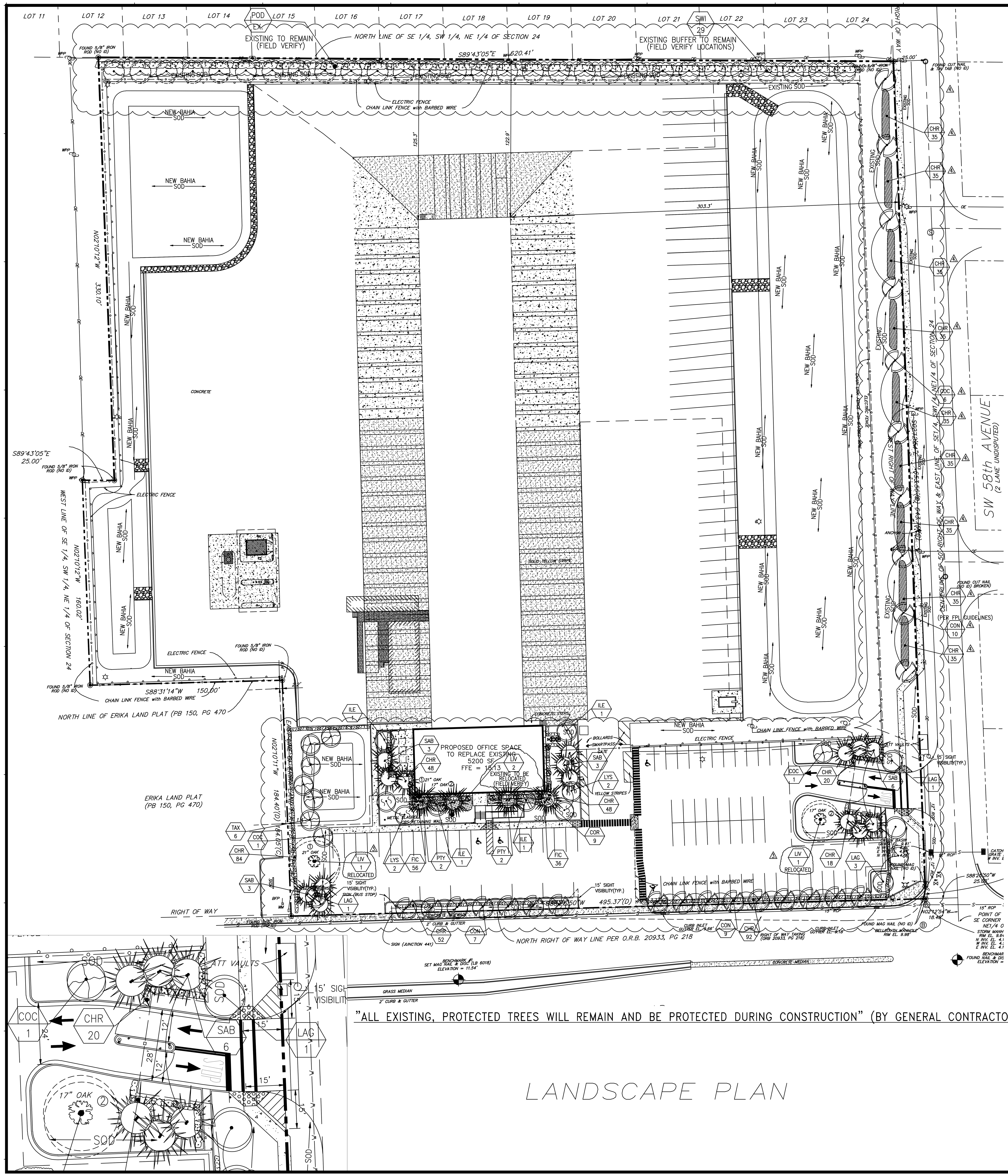

"ALL EXISTING, PROTECTED TREES WILL REMAIN AND BE PROTECTED DURING CONSTRUCTION" (BY GENERAL CONTRACTOR)

LANDSCAPE PLAN

GRAPHIC SCALE

(IN FEET)
1 inch = 40 ft.

NOTES

CONTRACTOR SHALL OBTAIN A TREE REMOVAL/RELOCATION PERMIT AND PROVIDE FOR ANY MITIGATION PRIOR TO OBTAINING A BUILDING PERMIT.
ALL LANDSCAPE MATERIALS SHALL BE PLANTED 6" MINIMUM DISTANCE AWAY FROM ALL TREE/PALM ROOTBALLS.

FIRE HYDRANT ZONE

REQUIREMENTS APPLY TO FIRE HYDRANTS, SIAMESE CONNECTIONS AND ANY OTHER FIRE EQUIPMENT FOR UTILIZING FIRE HOSE ON PUBLIC OR PRIVATE PROPERTY. BY THE AUTHORITY OF SOUTH FLORIDA FIRE PREVENTION CODE SECTION 5211.2. THE DIAGRAM ABOVE SHALL APPEAR ON ALL LANDSCAPE PLANS PRIOR TO APPROVAL. THE CLEAR ZONE SHALL BE FREE OF LANDSCAPE (EXCEPT SOD), MAILBOXES, PARKING, LAMP-POSTS AND ALL OTHER OBJECTS. EXCEPTIONS: OTHER FIRE FIGHTING OR TRAFFIC POSTS TO PROTECT FIRE EQUIPMENT.

CALL 48 HOURS BEFORE YOU DIG IN FLORIDA
811 Know what's below. Call before you dig.
IT'S THE LAW!
SUNSHINE STATE ONE CALL OF FLORIDA, INC.

NOTE: ALL NEW TREES/PALMS ALONG (EXISTING OVERHEAD UTILITY LINES)SHALL BE INSTALLED PER FP&L GUIDELINES IN "PLANT THE RIGHT TREE IN THE RIGHT PLACE."

LANDSCAPE LEGEND

	NATIVE	CODE	AMOUNT	BOTANICAL NAME / COMMON NAME	SIZE	REMARKS
	YES	ILE	4	ILEX ATTENUATA / "EAST PALATKA"	12'-14'X5'-6'	F.G. 5' C.T. 2 1/2" CAL.
	NO	LAG	5	LAGERSTROEMIA INDICA/CRAPE MYRTLE ("USDA")	12'-14'X5'-6'	F.G. 5' C.T."MULTI-STEM"
3	YES	SWI	EX.	SWIETENIA MAHOGANI / MAHOGANY	16'-18'X6'-7'	EXISTING TO REMAIN (NORTH PERIMETER)
	YES	LYS	4	LYSILOMA LATISILIQUA / TAMARIND	12'-14'X5'-6'	F.G. 5' C.T. 2 1/2" CAL.
	YES	LIV	2	QUERCUS VIRGINIANA / LIVE OAK	28'-32' HGTS.	EXISTING TO REMAIN-RELOCATE(2) AS SHOWN
	NO	PTY	4	PTYCHOSPERMA ELEGANS / ALEXANDER PALM	16'-18' X 7'-8'	F.G. "MATCHED" DOUBLES
3	YES	SAB	15	SABAL PALMETTO / CABBAGE PALM	16'-18'-20' CT.	F.G.
4	YES	CON	26	CONOCARPUS SERICEUS / SILVER BUTTONWOOD	12'-14'X5'-6'	45 GAL. MIN. 2" CAL. 5' C.T."STANDARD"
	YES	TAX	6	TAXODIUM DISTICHUM / BALD CYPRESS	12'-14'X5'-6'	F.G. 5' C.T. 2 1/2" CAL.
4	YES	COC	2	COCCOLOBA DIVERSIFOLIA / PIGEON PLUM	12'-14'X5'-6'	F.G. 5' C.T. 2 1/2" CAL.
	NO	FIC	92	FICUS MICROCARPA / "GREEN ISLAND"	14"X14" 3 GAL.	30" O.C.
4	YES	CHR	677	CHRYSOBALANUS ICACO / "RED TIP"	30"X18"	30" O.C. FULL TO BASE
	NO	POD	EX.	PODOCARPUS MACROPHYLLUS / "MAKI"	6'-8' HGT.	24" O.C. EXISTING TO REMAIN (NORTH PERIMTER)
	NO	COR	9	CORDYLINE FRUTICOSA / "RED SISTER"	30"-36" 7 GAL.	AS SHOWN-FULL MULTI-STEM

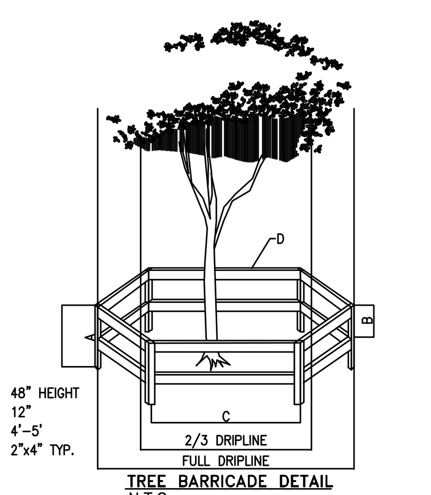

A 48" HEIGHT
B 12"
C 4'-5'
D 2"x4" TYP.

TREE BARRICADE DETAIL
N.T.S.

TREE BARRICADE NOTES:

1. ALL EXISTING TREES SHALL BE TRIMMED AND SHALL COMPLY WITH THE "AMERICAN NATIONAL STANDARDS INSTITUTE, (ANSI), A300-1995", CURRENT EDITION RESPECTIVELY.
2. EXISTING TREES TO BE BARRICADED PRIOR TO BEGINNING OF CONSTRUCTION & SHALL REMAIN IN PLACE DURING CONSTRUCTION, IF REQUIRED SEE PLAN.
3. NO HEAVY EQUIPMENT, CONSTRUCTION MATERIALS OR SOIL DEPOSITS ARE TO BE ALLOWED INSIDE TREE BARRIERS.
4. TOPSOIL SHALL BE CLEAN & REASONABLY FREE OF CONSTRUCTION DEBRIS, WEEDS, ROCKS, & NOXIOUS PESTS & DISEASE (SEE SOIL PLANTING SPECIFICATIONS).
5. TREE REMOVAL PERMIT SHALL BE REQUIRED PRIOR TO CONSTRUCTION & ANY CLEARING OPERATIONS AS REQUIRED.
6. ALL PROPOSED TREES TO BE RELOCATED SHALL BE ROOT PRUNED 8 WEEKS PRIOR TO CONSTRUCTION AND DONE ACCORDING TO GOOD NURSERY PRACTICE AS REQUIRED. TRENCH DEPTH SHALL BE 18"-36"; ROOT BALL SHALL BE A MINIMUM OF 60" WHEN ROOT PRUNED. FILL TRENCH WITH FIBROUS MATERIAL SUCH AS LEAVES, OR WOOD SHAVINGS. WATERING SHALL BE ONCE A WEEK DURING ROOT PRUNING. TORN ROOTS SHALL BE TRIMMED TO SOLID WOOD. RELOCATED TREES SHALL BE LIGHTLY PRUNED BY HAND. LANDSCAPE CONTRACTOR SHALL WATER RELOCATED TREES W/ TEMPORARY IRRIGATION EVERYDAY FOR THE FIRST MONTH THEN 2-3 TIMES A WEEK UNTIL SYSTEM IS FULLY AUTOMATIC; OWNER TO SUPPLY WATER ON SITE. TRANSPLANT TREES W/ 60" TREE SPADE, AND / OR TREE CRANE. TRANSPLANTING HOLE SHALL BE AT LEAST 1/3 BIGGER THAN THE AREA THAT WAS TRENCHED FOR TRANSPLANTING.
7. SET TREES NO DEEPER THAN IT WAS IN ITS ORIGINAL GROWING WITH THE ROOT BALLS EVEN WITH , OR SLIGHTLY HIGHER (+- 1") THAN THE FINISHED GRADE.
8. PROVIDE DISH TO RETAIN WATER, ELIMINATE AIR POCKETS WITH THE USE OF WATER HOSE, HOLE SHOULD BE FILLED WITH A MIXTURE OF GOOD TOP SOIL (SEE SPECIFICATION SHEET).
9. A TEMPORARY HOLDING AREA SHALL BE USED ON SITE DURING CONSTRUCTION OR UNTIL TREES CAN BE PROPERLY RELOCATED, COORDINATE WITH LANDSCAPE ARCHITECT.
10. LANDSCAPE CONTRACTOR TO REMOVE ALL EXISTING BRAZILIAN PEPPER, FLORIDA HOLLY AND ALL EXOTIC NUISANCE MATERIAL ON SITE AS REQUIRED.
11. CONTRACTOR SHALL FIELD ADJUST NEW TREE LOCATIONS TO BE 15' MINIMUM FROM LIGHT STANDARDS.

EXISTING TREES TO REMAIN REQUIRED BARRICADES

4 LANDSCAPE DATA

DESCRIPTION	REQUIRED	PROVIDED
PERIMETER BUFFER (AREA SHOWN CLOUDED)		
1 TREE PER 30 L.F. (900.00 L.F.)	30	30
1 TREE PER 190 S.F. TERMINAL ISLAND:	N/A	N/A
STREET TREES 1 PER 50 L.F.(647.00 L.F.) STREET FRONTAGE:	13	13
AT GRADE PARKING 1 TREE PER 20 L.F.	12	12
TOTAL TREES:	**55**	**55**
NATIVE TREES 60% MIN.:	33	49 (89%)
NATIVE SHRUBS 50% MIN.:	389/50%	677/87%

NOTES

1. SEE SPECIFICATION SHEET FOR ADDITIONAL DETAILS.
2. ALL PLANT MATERIAL SHALL BE FLORIDA NO. 1 OR BETTER & SHALL BE INSTALLED AS SPECIFIED IN "FLORIDA DEPT. OF AGRICULTURAL GRADES AND STANDARDS", CURRENT EDITION RESPECTIVELY.
3. LANDSCAPE CONTRACTOR TO PROVIDE AN AUTOMATIC LAWN IRRIGATION SYSTEM GUARANTEEING 100% COVERAGE & 50% MIN. OVERLAP TO ALL LANDSCAPED AREAS; SYSTEM SHALL HAVE A RAIN SENSOR DEVICE AS REQUIRED.
4. ALL EXISTING TREES SHALL BE TRIMMED AND SHALL COMPLY WITH THE "AMERICAN NATIONAL STANDARDS INSTITUTE, (ANSI), A300-1995", CURRENT EDITION RESPECTIVELY.
5. LANDSCAPE CONTRACTOR TO REMOVE ALL EXISTING BRAZILIAN PEPPER & FLORIDA HOLLY FROM SITE.
6. EXISTING TREES TO BE BARRICADED PRIOR TO BEGINNING OF CONSTRUCTION & SHALL REMAIN IN PLACE DURING CONSTRUCTION AS PER CITY OF HOLLYWOOD. (SEE DETAIL)
7. NO HEAVY EQUIPMENT, CONSTRUCTION MATERIALS OR SOIL DEPOSITS ARE TO BE ALLOWED INSIDE TREE BARRIERS.
8. TOPSOIL SHALL BE CLEAN & REASONABLY FREE OF CONSTRUCTION DEBRIS, WEEDS, ROCKS, & NOXIOUS PESTS & DISEASE (SEE SOIL PLANTING SPECIFICATIONS).
9. TREE REMOVAL PERMIT SHALL BE REQUIRED PRIOR TO CONSTRUCTION & ANY CLEARING OPERATIONS AS REQUIRED.
10. LANDSCAPE CONTRACTOR SHALL NOT INSTALL PLANT MATERIALS WITHIN ROOTBALLS OF TREES AND OR PALMS AND SHOULD BE INSTALLED OUTSIDE ROOTBALL AREAS AS REQUIRED.
11. SET TREES NO DEEPER THAN IT WAS IN ITS ORIGINAL GROWING WITH THE ROOT BALLS EVEN WITH , OR SLIGHTLY HIGHER (+- 1") THAN THE FINISHED GRADE.
12. SUBSTITUTION: PLANT SUBSTITUTION REQUESTS, FOR PLANT MATERIAL NOT OBTAINABLE IN THE TYPE AND SIZES SHOWN PRIOR TO SUBMISSION OF BIDS; REQUIRED (2) APPROVALS AS FOLLOWS: ALL SUBSTITUTION REQUESTS SHALL BE DIRECTED TO THE LANDSCAPE ARCHITECT & "CITY OF HOLLYWOOD'S LANDSCAPE PLAN REVIEWER" FOR CONSIDERATION AND REQUIRED APPROVAL; IT IS THE LANDSCAPE CONTRACTOR'S OBLIGATION TO KNOW WHERE THEY CAN OBTAIN ALL MATERIAL AT THE TIME OF BIDDING AND AT THE TIME A CONTRACT IS EXECUTED.
13. A SIGHT VISIBILITY TRIANGLE SHALL BE PROVIDED. THE SIGHT VISIBILITY TRIANGLE SHALL PROVIDE UNOBSTRUCTED CROSS-VISIBILITY FOR VEHICULAR, PEDESTRIAN, AND BICYCLE TRAFFIC AT LEVEL BETWEEN 30" & 8 FT MEASURED FROM GRADE LEVEL AT ALL ENTRANCES, EXITS, AND INTERSECTIONS AS REQUIRED. TREES SHALL BE MAINTAINED WITH SIX (6') CLEAR TRUNK TO KEEP CONTINUALLY ALLOWANCE FOR CLEAR NATURAL VISUAL SURVEILLANCE TO THE SITE. SHRUBBERY SHALL NOT EXCEED THREE (3') AT MATURITY; TREES SHALL BE PLANTED 15' FROM LIGHT STANDARDS TO MAINTAIN ILLUMINATION LEVELS AS SPECIFIED.
14. LANDSCAPE CONTRACTOR TO CALL THE CITY OF HOLLYWOOD LANDSCAPE INSPECTOR AT (954)921-3471 TO SCHEDULE A PRECONSTRUCTION MEETING PRIOR TO INSTALLATION AS REQUIRED.
LANDSCAPE CONTRACTOR TO CONTACT CITY LANDSCAPE INSPECTOR PRIOR TO RELOCATION OF EXISTING TREES OR PALMS FOR CONDITION OF EXISTING MATERIAL AND SHALL BE APPROVED UPON INSPECTION OR IF DEEMED NOT FEASIBLE ,THAN A NEW TREE/PALM SHALL BE INSTALLED IF REQUIRED.
15. EXISTING TREES SHALL BE PRUNED AND MAINTAINED TO HAVE 6'-8' MIN. CLEARANCE OVER SIDEWALKS AS REQUIRED.

THE CONTRACTOR IS SPECIFICALLY CAUTIONED THAT THE LOCATION AND/OR ELEVATION OF EXISTING UTILITIES AS SHOWN ON THESE PLANS IS BASED ON DESIGN DRAWINGS, RECORDS OF THE VARIOUS UTILITY COMPANIES, AND WHERE POSSIBLE, MEASUREMENTS TAKEN IN THE FIELD. CORE STATES, INC. DOES NOT GUARANTEE THAT LOCATIONS SHOWN ARE EXACT. THE CONTRACTOR MUST CONTACT THE APPROPRIATE UTILITY COMPANIES AT LEAST 72 HOURS BEFORE ANY EXCAVATION TO REQUEST EXACT FIELD LOCATIONS OF UTILITIES.

KNOW WHAT'S BELOW ALWAYS CALL 811 BEFORE YOU DIG
It's fast. It's free. It's the law.
www.callsunshine.com

© COPYRIGHT
THE FOLLOWING DRAWINGS ARE INSTRUMENTS OF SERVICES TO THE LANDSCAPE ARCHITECT. THEY ARE NOT PRODUCTS OF DESIGN. ALL IDEAS, DESIGNS, ARRANGEMENTS, AND PLANS INDICATED OR REPRESENTED BY THIS DRAWING ARE OWNED BY AND ARE THE PROPERTY OF SHALL BE USED THE DESIGNER, AND WERE CREATED, EVOLVED, AND DEVELOPED FOR USE ON AND IN CONNECTION WITH THE SPECIFIED PROJECT OR SITE. NONE OF SUCH IDEAS, DESIGNS, ARRANGEMENTS, OR PLANS AND SPECIFICATIONS BY OR DISCLOSED TO ANY PERSON, FIRM, OR CORPORATION FOR ANY PURPOSE WHATSOEVER WITHOUT THE WRITTEN PERMISSION OF THE DESIGNER.

RICHARD BARTLETT LANDSCAPE,INC.
12773 W. FOREST HILL BLVD.,STE.213
WELLINGTON, FL 33414
TEL:(561) 795-0443 FAX:(561)791-7429
LANDSCAPE ARCHITECTURE LC26000352
LANDSCAPE/IRRIGATION CONSTRUCTION
CARL B. HIGGINS RLA#0001436 ASLA
EMAIL-planmaker@bellsouth.net

SEAL

Rev. #	Date	Description
1	05/03/2010	REVISED PER CITY COMMENTS
2	05/14/2010	REVISED PER CITY COMMENTS
3	06/07/2010	REVISED PER CITY COMMENTS
4	06/15/2010	REVISED PER CITY COMMENTS

FEDEX FREIGHT
2200 FORWARD DR, HARRISON, AR 72601

FEDEX FREIGHT HWO MAINTENANCE UPGRADE
5861 PEMBROKE ROAD, HOLLYWOOD, FL 33023

LANDSCAPE PLAN

FedEx Freight

CORE STATES GROUP
6802 Lakeview Center Drive, Suite 500
Tampa, FL 33619
Phone (813) 490-1755
Fax (813) 490-1759
dalgina@core-eng.com

Job#:	FED-11281 RBL#10-01-1863
Scale:	1"=40'.0"
Date:	03-02-10
Drawn By: RGB	
Checked By:CBH	

Documents prepared by CoreStates, Inc., including this document, are to be used only for the specific project and specific use for which they were intended. Any extension of use to any other projects, by owner or by any other party, without the expressed written consent of CoreStates, Inc. is done unlawfully and at the users own risk. If used in a way other than that specifically intended, user will hold CoreStates, Inc. harmless from all claims and losses.

DAVID J. ALGINA, P.E. (FL)
FL P.E. LICENSE # 69798
DATE:

L-1